GENSET MODEL	ENGINE MODEL	ALTERNATOR MODEL	WEIGHT WITH OIL (kg)	WEIGHT WITH OIL & WATER (kg)	WEIGHT OIL, WATER & FUEL (kg)	SKID WEIGHT WITH OIL (kg)	SKID WEIGHT WITH OIL & WATER (kg)	TANK CENTER OF GRAVITY FROM 01	SKID CENTER OF GRAVITY FROM 01
MARELLI ALTERNATOR									
P200-3	1106A-TAG3	MJB250MB4	1552	1579	1913	1448	1475	TBC	TBC
P200-4	1106C-TAG4	MJB250MB4	1552	1579	1913	1448	1475	TBC	TBC
P220-3	1106A-TAG4	MJB250LA4	1622	1649	1983	1518	1545	TBC	TBC
LEROY SOMER ALTERNATOR									
P200-3	1106A-TAG3	LL5014D	1547	1574	1908	1443	1470	TBC	TBC
P200-4	1106C-TAG4	LL5014D	1547	1574	1908	1443	1470	TBC	TBC
P220-3	1106A-TAG4	LL5014F	1587	1614	1948	1483	1510	TBC	TBC

METRIC 449-5885

GENSET MODEL	SOCKET	DESCRIPTION	SIZE
ALL	A	FUEL LEVEL SWITCH	1" BSPP
	B	FUEL FILL	2" BSPP
	C	FUEL GAUGE	1 1/2" BSPP
P200-3 P220-3	D	FUEL SUPPLY	1/2" BSPP
	E	FUEL RETURN	1/2" BSPP
	F	REMOTE SUPPLY	1" BSPP
	G	REMOTE RETURN	1" BSPP
	H	SKID FUEL SUPPLY	1/2" BSPP
	J	SKID FUEL RETURN	1/2" BSPP
P200-4	D	FUEL RETURN	1/2" BSPP
	E	FUEL SUPPLY	1/2" BSPP
	F	REMOTE RETURN	1" BSPP
	G	REMOTE SUPPLY	1" BSPP
	H	SKID FUEL RETURN	1/2" BSPP
	J	SKID FUEL SUPPLY	1/2" BSPP

TANK CAPACITY (LITRES)	
FILLABLE	USABLE
394	370

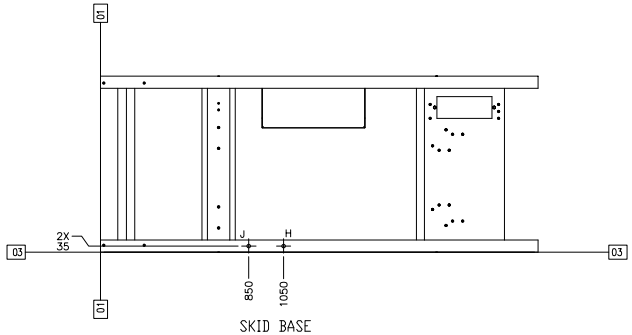

SKID BASE
(OPT)

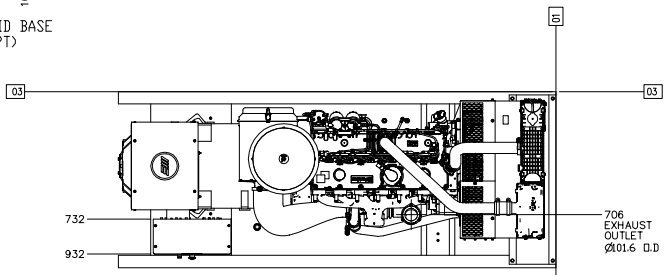

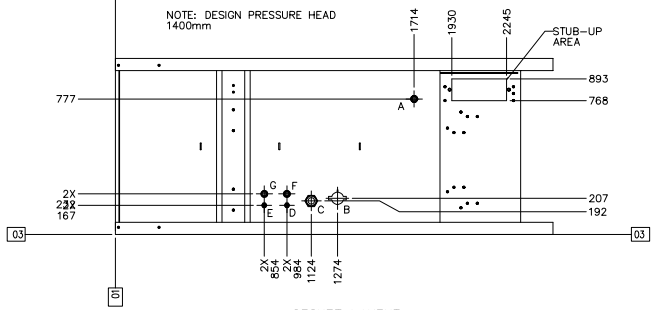

SOCKET LAYOUT
ITEMS REMOVED FOR CLARITY

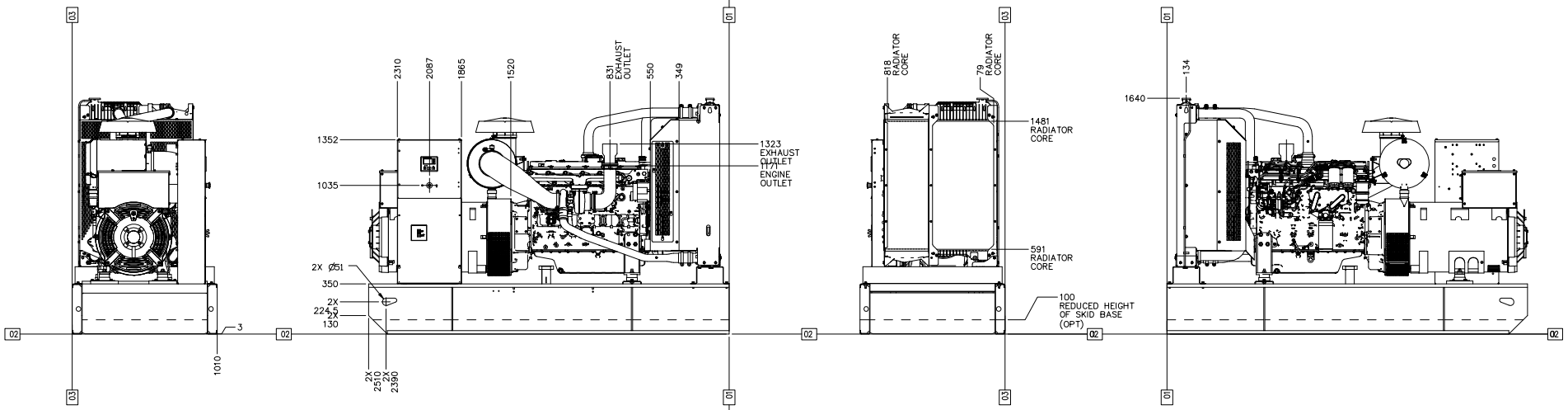

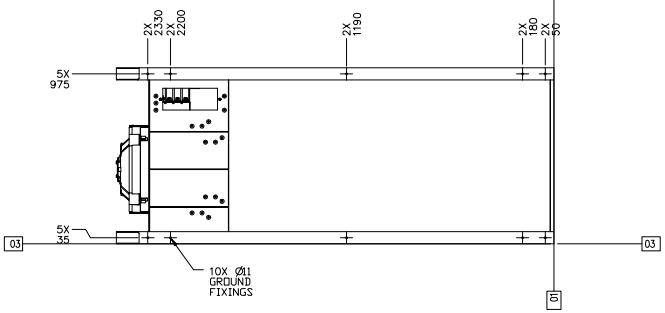

ALL DIMENSIONS ARE
REFERENCE

1E2722B	DRAWING
1E0198W	LETTERS
1E0013Y	CONFIDENTIALITY
1E0012A	INTERPRETATION
1E0011	INTPR &

Caterpillar Confidential Yellow

PROD. X OTHER

UNLESS OTHERWISE SPECIFIED DIMENSIONS ARE IN mm DIMENSIONS W/O TOL ARE BASIC

VERSION TYPE: PRIMARY X / SECONDARY

THIRD ANGLE PROJECTION

SHEET 1 OF 1

DWG CONTROL NB759

FG WILSON

THE INFORMATION HEREIN IS THE PROPERTY OF CATERPILLAR INC. AND/OR ITS SUBSIDIARIES. WITHOUT WRITTEN PERMISSION, ANY DIGITAL, MAGNETIC, OR CHEMICAL AND ANY THIRD PARTY USAGE FOR WHICH IT IS LICENSED IS PROHIBITED.

GENERAL AR-GENSET

449-5885 VER DK CHG 00 E