GENSET MODEL	ENGINE MODEL	ALTERNATOR MODEL	WEIGHT			SKID WEIGHT		TANK CENTER OF GRAVITY FROM 01	SKID CENTER OF GRAVITY FROM 01
			WITH OIL (kg)	WITH OIL & WATER (kg)	OIL, WATER & FUEL (kg)	WITH OIL (kg)	WITH OIL & WATER (kg)		
MARELLI ALTERNATOR									
P50-3	1103A-TG1	MJB 200 SB4	1012	1025	1147	967	980	TBC	TBC
P55-3	1103A-TG2	MJB 200 SB4	1012	1025	1147	967	980	TBC	TBC
P65-5	1103A-TG2	MJB 200 MA4	1054	1067	1189	1009	1022	1173	TBC
LEROY SOMER ALTERNATOR									
P50-3	1103A-TG1	LL1514L	965	978	1100	920	933	TBC	TBC
P55-3	1103A-TG2	LL1514N	970	983	1105	925	938	TBC	TBC
P65-5	1103A-TG2	LL1514P	981	994	1116	936	949	TBC	TBC
P40-3S	1103A-TG1	LLB1514P	981	994	1116	936	949	TBC	TBC
P50-5S	1103A-TG2	LLB3114D	1089	1102	1224	1044	1057	TBC	TBC

METRIC 449-5886

SOCKET	DESCRIPTION	SIZE
A	FUEL LEVEL SWITCH	1" BSPP
B	FUEL FILL	2" BSPP
C	FUEL GAUGE	1 1/2" BSPP
D	FUEL SUPPLY	1/2" BSPP
E	FUEL RETURN	1/2" BSPP
F	REMOTE SUPPLY	1" BSPP
G	REMOTE RETURN	1" BSPP
H	SKID FUEL SUPPLY	1/4" BSPP
J	SKID FUEL RETURN	1/4" BSPP

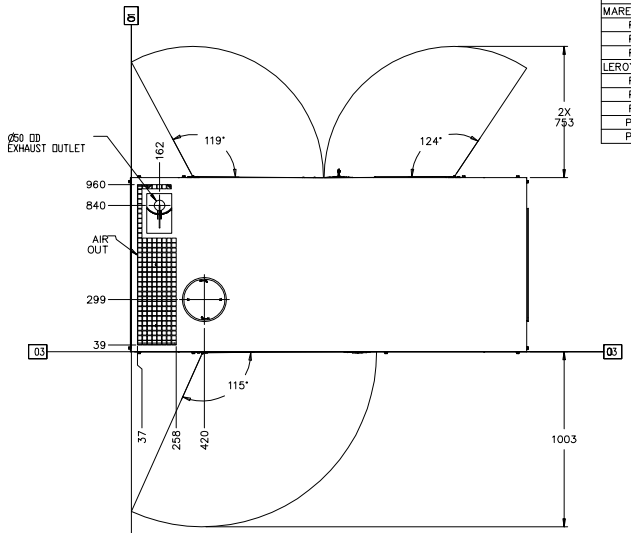

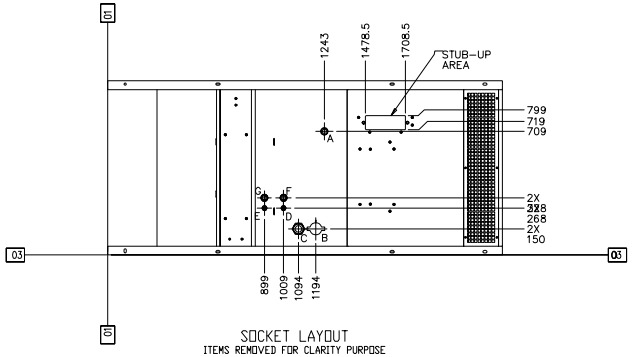

SOCKET LAYOUT
ITEMS REMOVED FOR CLARITY PURPOSE

TANK CAPACITY (LITRES)	
FILLABLE	USABLE
145	131

NOTE: DESIGN PRESSURE HEAD 1400 mm

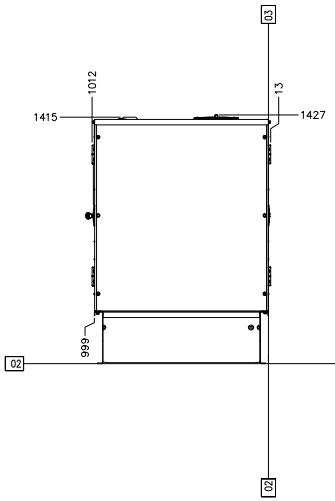

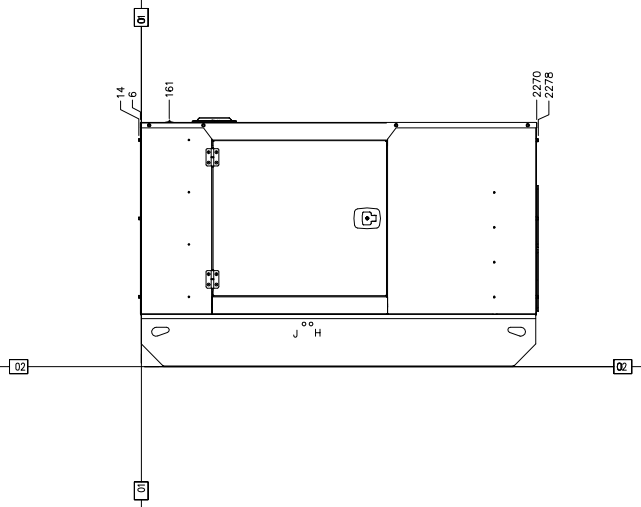

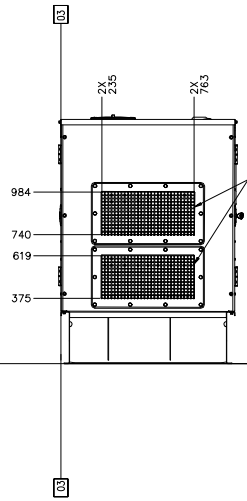

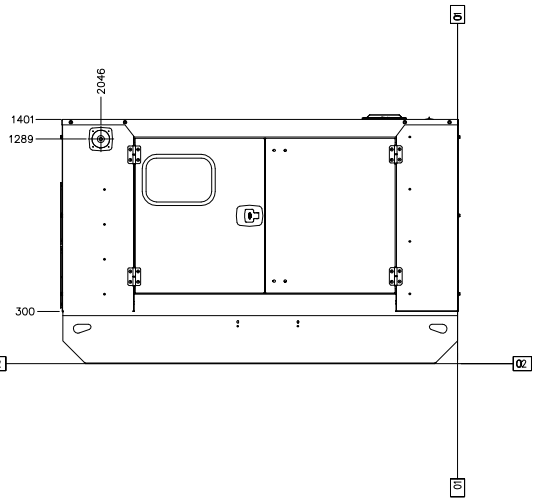

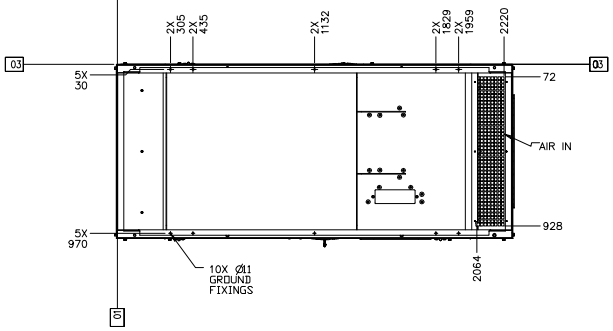

ALL DIMENSIONS ARE REFERENCE

	1E2722B	DRAWING
	1E0198W	LETTERS
	1E0013Y	CONFIDENTIALITY
	1E0012A	INTERPRETATION
1E0011	INTPR &	
Caterpillar Yellow	Confidential	

UNLESS OTHERWISE SPECIFIED DIMENSIONS ARE IN mm. DIMENSIONS W/O TOL ARE BASIC

VERSION TYPE: PRIMARY X / SECONDARY

THIRD ANGLE PROJECTION

SHEET 1 OF 1

DWG CONTROL N3759

FG WILSON

THE INFORMATION CONTAINED ON THIS DOCUMENT IS THE PROPERTY OF FG WILSON. NO PART OF THIS DOCUMENT MAY BE REPRODUCED OR TRANSMITTED IN ANY FORM OR BY ANY MEANS, ELECTRONIC, MECHANICAL, PHOTOCOPYING, OR OTHERWISE, WITHOUT THE PRIOR WRITTEN PERMISSION OF FG WILSON.

GENERAL AR-GENSET

449-5886 VER DK DWG 01 E