0500-4104 | A1

REL. No.	LTR	No.	REVISION	ZONE	DRN	CHKD	APPROVED	DATE
ERK10135	A	1	PRODUCTION RELEASE	–	JM	AA	BARGENT	10/05/04
ERK12813	B	1	BASE TANK REMOVED AS STANDARD	15D	HL	CK	CONNOLLY	10/04/06
		2	BASE TANK REMOVED AS STANDARD	12D	HL	CK	CONNOLLY	10/04/06
		3	BASE TANK REMOVED AS STANDARD	6D	HL	CK	CONNOLLY	10/04/06
ERK14151	C	1	FIRST USED ON DESCRIPTION WAS DFLC	--	RM	CK	CONNOLLY	22/02/07

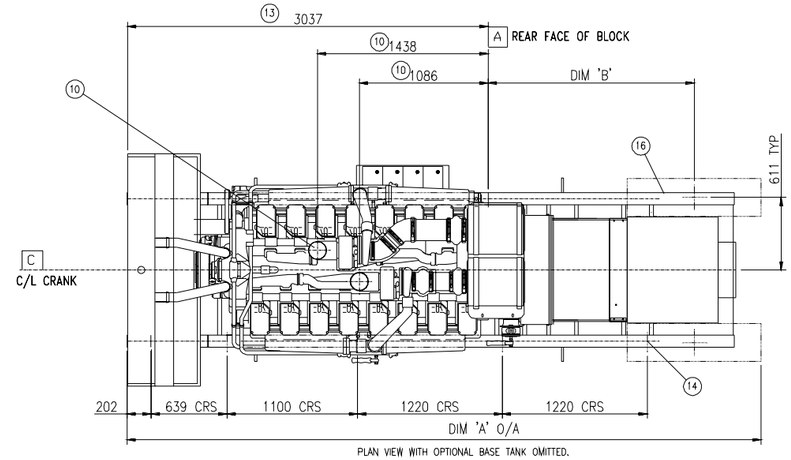

PLAN VIEW WITH OPTIONAL BASE TANK OMITTED.

NOTES:

1. ENTRANCE OR CIRCUIT BREAKER BOX OPTION WILL BE MOUNTED ON THE LEFT SIDE VIEWED FROM THE CONTROL END UNLESS OTHERWISE STATED.
2. CUSTOMER LOAD CABLES TO BE FLEXIBLE TO ALLOW FOR MOVEMENT OF GENSET ON A.V. MOUNTS.
3. FOR OPTIONS NOT SHOWN SEE ASSOCIATED OPTION DETAILS.
4. ALL WEIGHTS SHOWN ARE THE MAXIMUM WEIGHTS FOR EACH ENGINE/ALTERNATOR COMBINATION + ALL STANDARD OPTIONS.

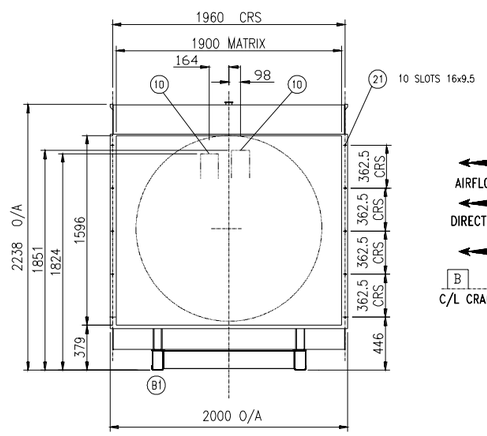

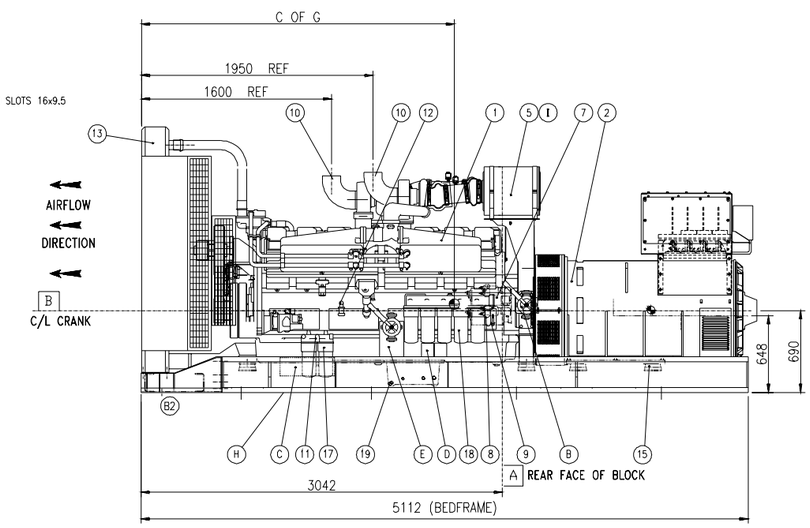

SIDE VIEW WITH OPTIONAL BASE TANK.

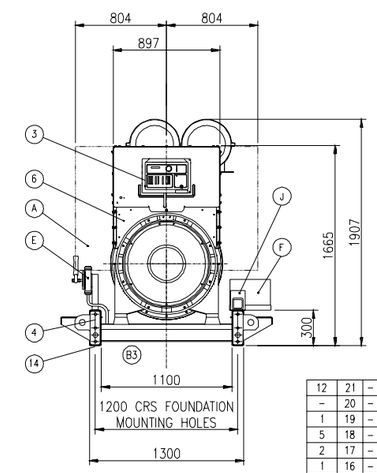

CONTROL END VIEW WITH OPTIONAL BASE TANK.

QTY	ITEM	PART No.	DWG SIZE	DESCRIPTION OR MATERIAL
12	21	–	–	RADIATOR DUCT FIXING HOLES
–	20	–	–	–
1	19	–	–	SUMP DRAIN
5	18	–	–	OIL FILTERS
2	17	–	–	FUEL FILTERS
1	16	–	–	LOAD CONNECTION GLAND PLATE
8	15	–	–	RESILIENT MOUNTINGS
10	14	–	–	FOUNDATION FIXING HOLES 22 DIA
1	13	–	–	RADIATOR 40°C/50°C SHOWN
1	12	–	–	SPILL RETURN FLEX TERM-3/4" BSP MALE
1	11	–	–	FUEL FEED FLEX TERM-1" BSP MALE
2	10	–	–	EXHAUST OUTLETS - 152 O/D)6")
1	9	–	–	OIL LEVEL DIPSTICK
1	8	–	–	LUB OIL FILTER
2	7	–	–	STARTER MOTOR - FAR SIDE
1	6	–	–	CONTROL HOUSING (P7 ONLY)
1	5	–	–	AIR CLEANERS
1	4	–	–	BEDFRAME
1	3	–	–	CONTROL PANEL PCC2100 (SINGLE SET RUNNING ONLY)
1	2	–	–	ALTERNATOR-NEWAGE P7B/C/D/E/F
1	1	–	–	ENGINE - KTA50-G3

	ENGINE	ALTERNATOR	WT WITH DRY ENGINE Kg OPEN BED	WT WITH WET ENGINE Kg OPEN BED	DIM A	DIM B	C of G
	KTA50G3	P7B	9099	10075	5105	1487	2476
	KTA50G3	P7C	9350	10326	5105	1487	2515
	KTA50G3	P7D	9664	10640	5245	1627	2560
	KTA50G3	P7E	9888	10864	5245	1627	2594
	KTA50G3	P7F	10192	11168	5340	1722	2633

AVAILABLE OPTIONS	
ITEM	DESCRIPTION
A	CIRCUIT BREAKER / ENTRANCE
B	FUEL TRANSFER HAND PUMP
C	ENGINE COOLANT HEATER
D	FUEL/WATER SEPARATOR
E	SUMP DRAIN PUMP
F	LEAD ACID BATTERIES
G	BASE FUEL TANK-2000
H	FLOAT SWITCH
I	HEAVY DUTY AIR CLEANER (NOT SHOWN)
J	HEATER CONTROL BOX & SWITCH
K	PCCP3100 PARALLELING SET (SEE SHEET 2)
L	NO RADIATOR (SEE SHEET 2)
M	PLATE HEAT EXCHANGER (SEE SHEET 3)

TOLERANCE UNLESS OTHERWISE SPECIFIED
DIM: X = ±1, X.X = ±0.1, X.XX = ±0.5
HOLE: 0.00-4.99 = +0.15/-0.08; 5.00-9.99 = +0.20/-0.10; 10.00-17.49 = +0.25/-0.13; 17.50-24.99 = +0.30/-0.13
SIMILAR TO – | COPIED FROM –
THIRD ANGLE PROJECTION
THIS DOCUMENT IS THE PROPERTY OF CUMMINS POWER GEN. LTD. IT CONTAINS PROPRIETARY AND CONFIDENTIAL INFORMATION WHICH MUST NOT BE DUPLICATED, USED OR DISCLOSED OTHER THAN AS EXPRESSLY AUTHORIZED BY CUMMINS POWER GEN. LTD. OR ITS REPRESENTATIVE.
FOR INTERPRETATION OF DIMENSIONING AND TOLERANCING, SEE BS 308 Part 2

	NAME	DATE
DRAWN	J MATTHEWS	10/05/04
CHECKED	A ANDREWS	
APPROVED	M BARGENT	

FIRST USED ON C15000D5

Cummins Power Generation
Columbus Avenue, Manston, Ramsgate
Kent, CT12 5BF, England, UK

TITLE: GENSET OUTLINE

SITE CODE: PGK

DWG NO. 0500-4104 | SHEET 1 of 3 | DWG SIZE A1

AutoCAD | DO NOT SCALE PRINT | ANGLE TOL. ±1.0° | SCALE: 1:22