NOTE: VIEW SHOWS LC7024F ALTERNATOR, 1250A BREAKER (OPT) JACKET WATER (OPT), STONE GUARD (OPT), RADIATOR TRANSITION FLANGE (OPT)

OPEN GENSET – STANDARD 8HR TANKBASE

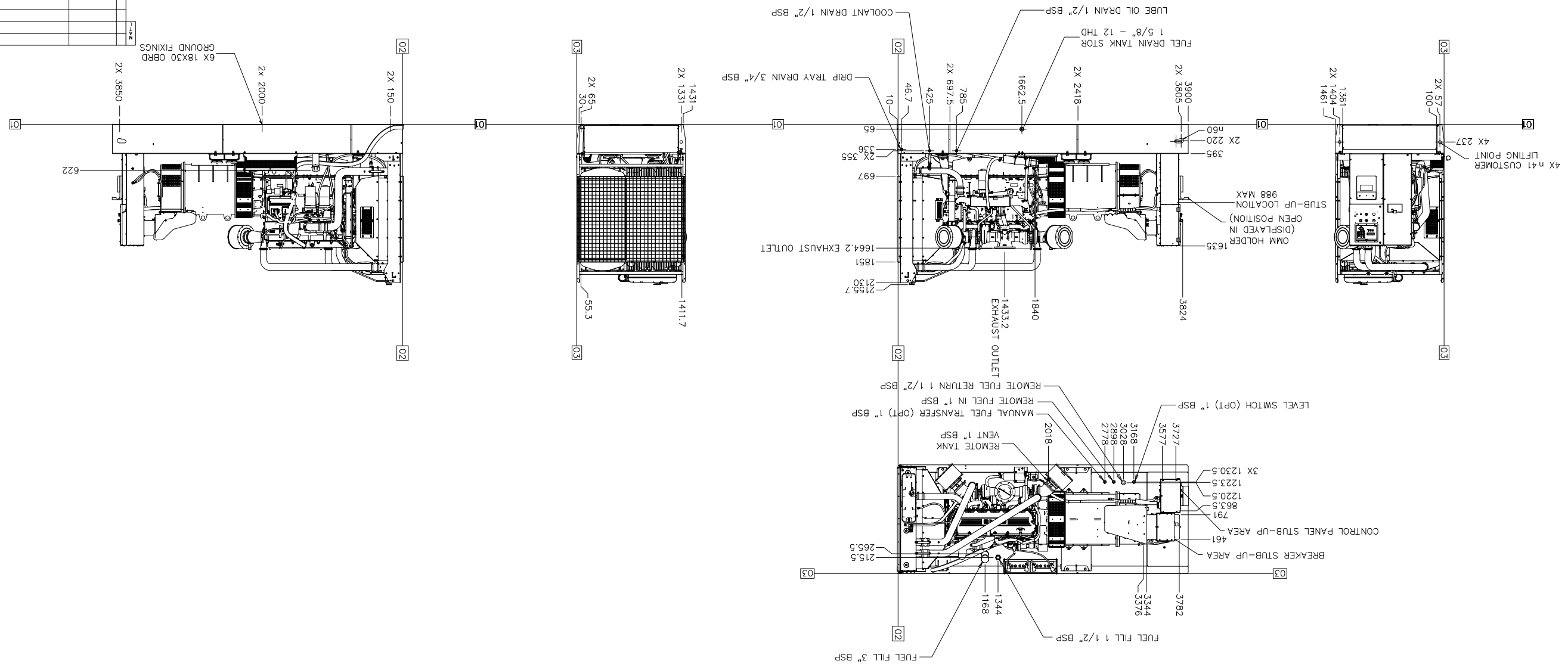

BREAKER STUB-UP LOCATION

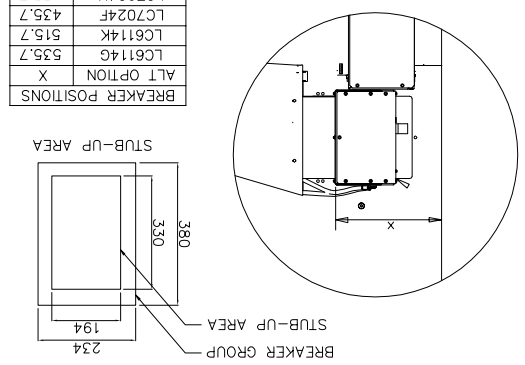

BREAKER POSITIONS	
ALT OPTION	X
LC6114G	535.7
LC6114K	515.7
LC7024F	435.7
LC7024H	435.7
LC7024J	323.7
LC7024L	323.7

ENG / ALT OPTION	MASS (KG) WITH OIL	MASS (KG) OIL & WATER	CENTER OF GRAVITY FROM 02
2806 / LC6114G	4149	4217	1180
2806 / LC6114K	4254	4322	1811
2806 / LC7024F	4264	4332	1841
2806 / LC7024H	4304	4372	1850
2806 / LC7024J	4404	4472	1871
2806 / LC7024L	4524	4592	1902

TANK BASE	TANK CAPACITY (L) FILLABLE	TANK CAPACITY (L) USEABLE
STANDARD	1188	1075

NOTE :DESIGN PRESSURE HEAD 3.7M

LIST		
1E27222	DRAWING	
1E00137	CONFIDENTIALITY	
1E01988	LETTERS	
1E0507B	IDENT	
1E0011	INTPR & TOL	

NOTE	
PROD. X	OTHER
UNLESS OTHERWISE SPECIFIED DIMENSIONS ARE IN mm DIMENSIONS W/O TOL ARE BASIC	VERSION TYPE: PRIMARY X SECONDARY
THIRD ANGLE PROJECTION	SHEET 1 OF 1
DWG CONTROL	MF759

FG WILSON

THE INFORMATION HEREIN IS THE PROPERTY OF CATERPILLAR INC AND/OR ITS SUBSIDIARIES. WITHOUT WRITTEN PERMISSION, ANY COPYING, TRANSMITTAL TO OTHERS AND ANY USE EXCEPT THAT FOR WHICH IT IS LOANED IS PROHIBITED.

GENERAL AR-COMPL

(2806 OPEN)

393-0339 VER DK CHG 00 E

METRIC 393-0339