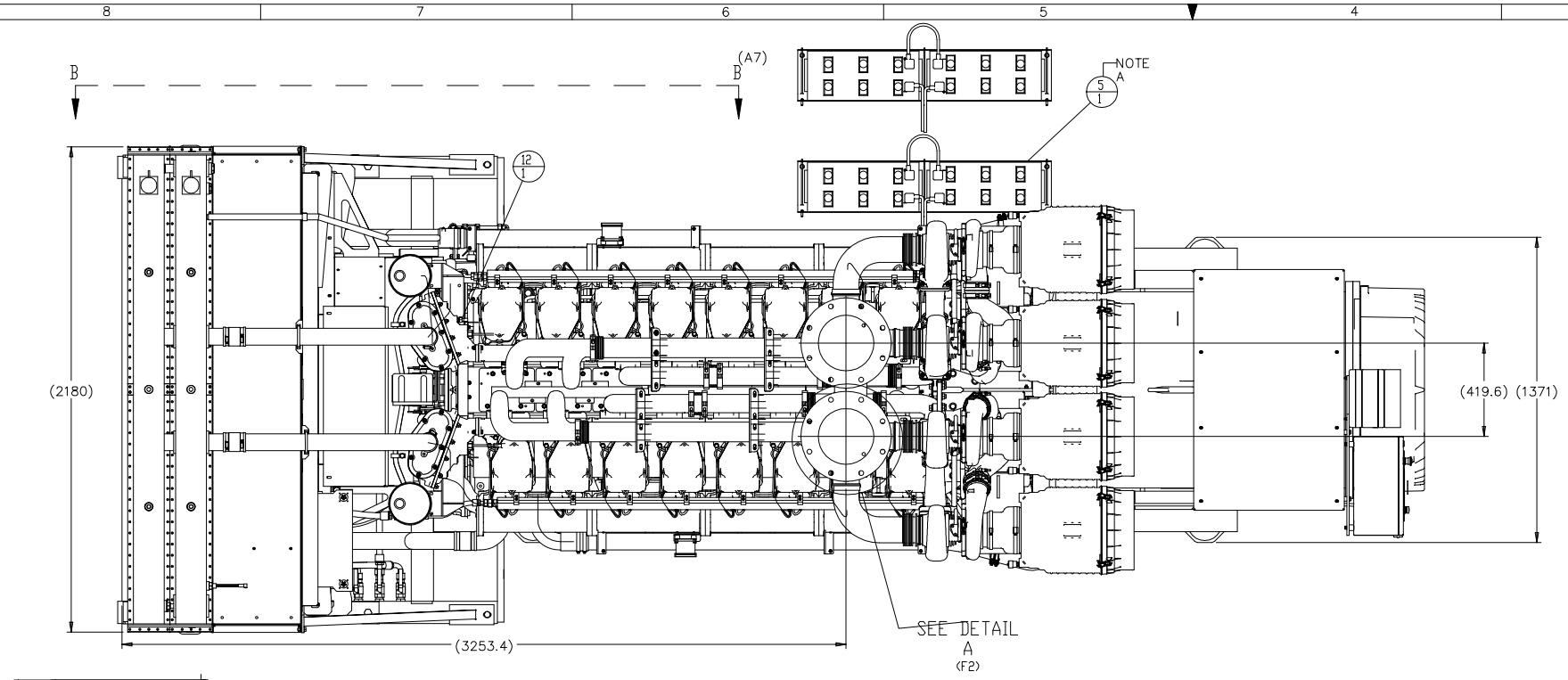

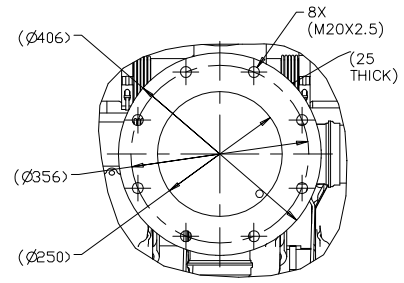

DETAIL A
SCALE 1:5
2X
(E5)

METRIC 367-9277

NOTE	ITEM	QTY	MEAS UNIT	PART NO.	NAME
					PARTS LIST
	1	1			CONT GP-MANUAL
	2	1			BOX-STORAGE
	3	1			COUPLING GP
	4	1			RADIATOR GP-MTG&
	5	1			BATTERY GP.
	6	1			MTG GP-ENGINE
	7	1			COUPLING GP-FLY
	8	1			LINES GP-FUEL
	9	1			DRAIN GP
	10	1			DRAIN GP-OIL
	11	1			SENSOR GP-PRESS
	12	1			SENSOR GP-TEMP
	13	1			PANEL GP-CONT -A
	14	1			WIRING GP
	15	1			WIRING GP-ALT
	16	1			FILM GP
	17	1			FILM GP
	18	1			FILM GP

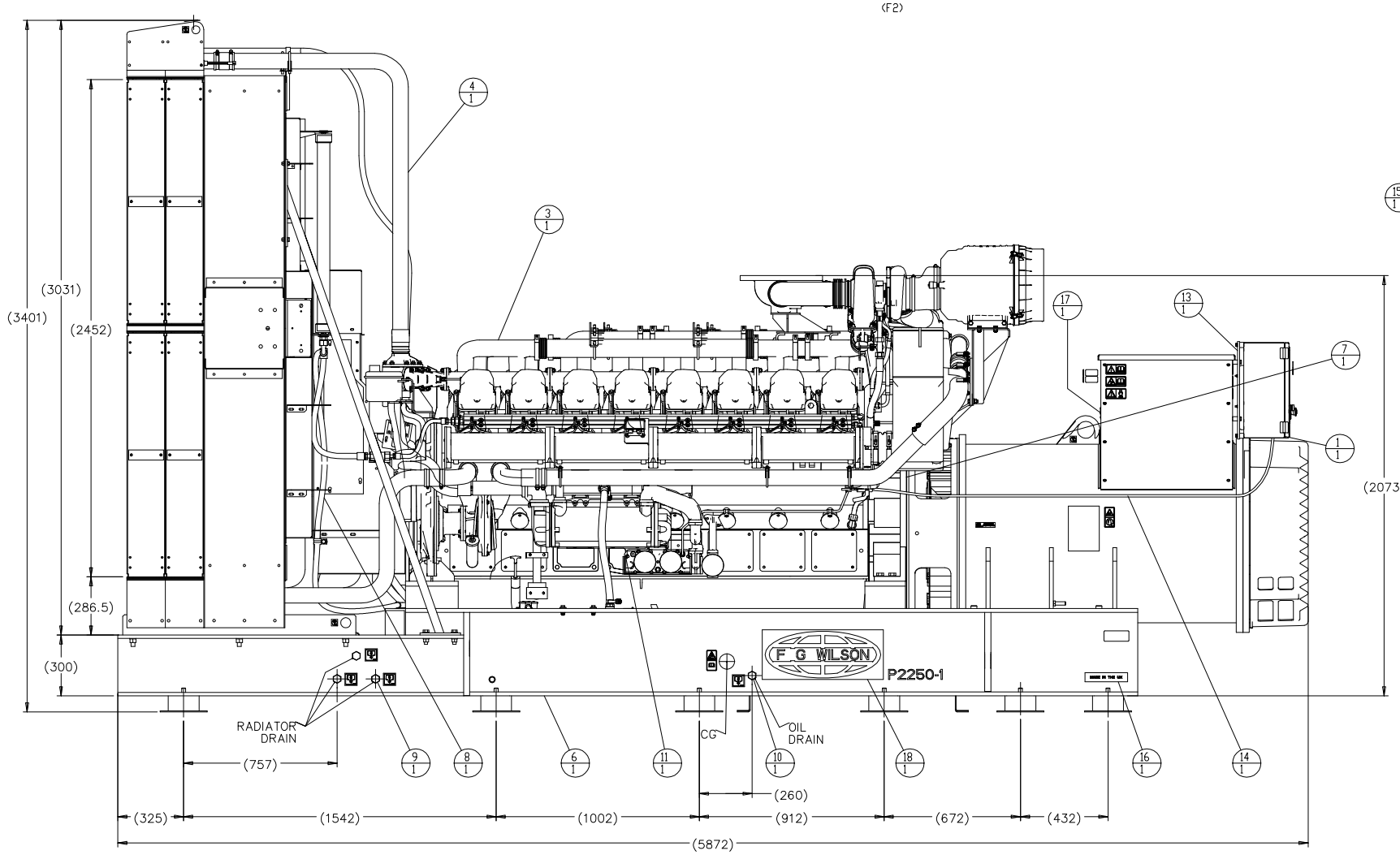

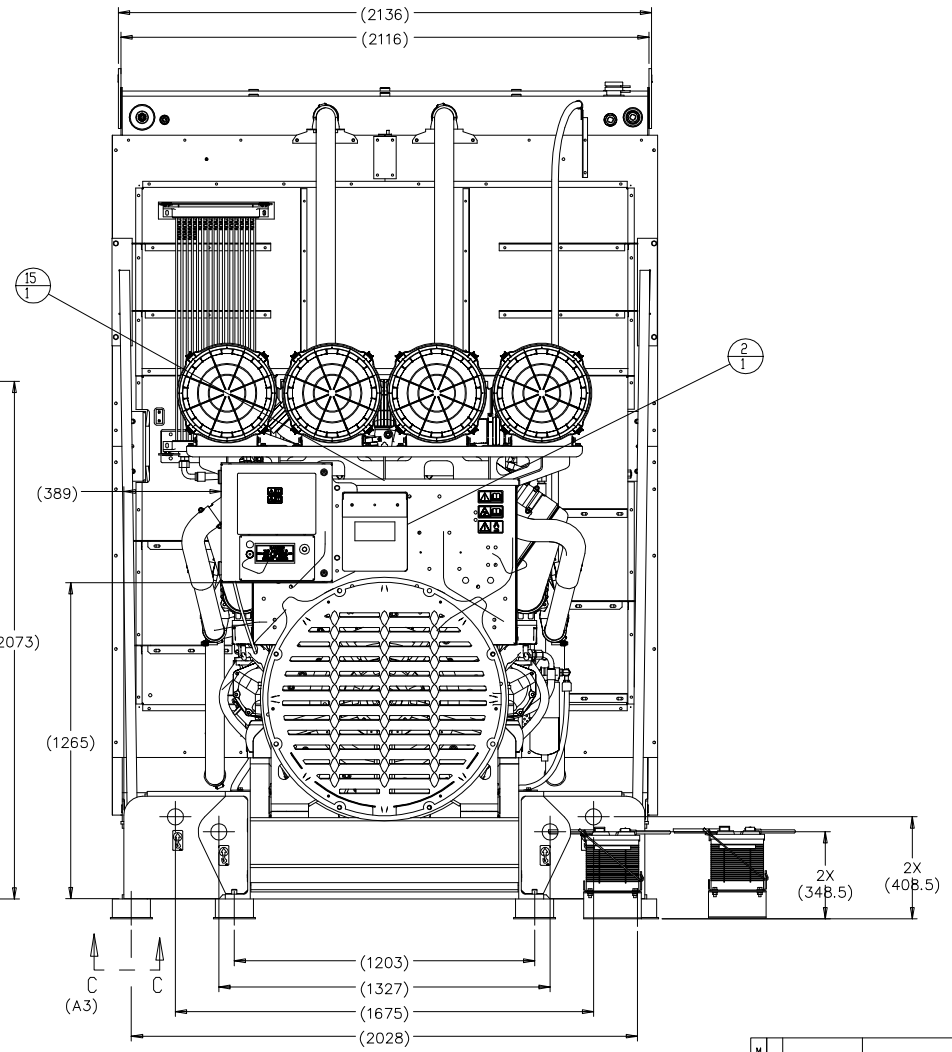

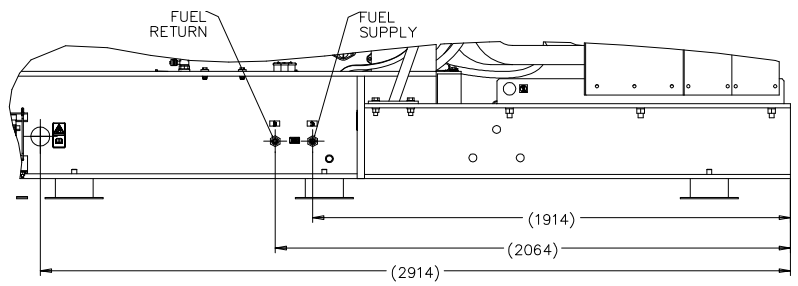

VIEW B-B
(F6)

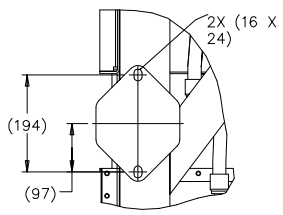

VIEW C-C
SCALE 1:5
12 PLACES
(B3)

NOTE A: TO BE SHIPPED LOOSE. MOUNTED TO FLOOR ONCE INSTALLED

MASS WITH LUBE OIL: 13493 Kg

MASS WITH LUBE OIL AND COOLANT: 13928 Kg

1E2722A	DRAWING
1E0013Y	CONFIDENTIALITY
1E0012A	INTERPRETATION
1E0011	INTPR & TOL
Caterpillar: Confidential Yellow	

PROD. X OTHER

UNLESS OTHERWISE SPECIFIED DIMENSIONS ARE IN mm
DIMENSIONS W/O TOL ARE BASIC

VERSION TYPE: PRIMARY X, SECONDARY

THIRD ANGLE PROJECTION

SHEET 1 OF 1

DWG CONTROL MF762

F G WILSON

THE INFORMATION HEREON IS THE PROPERTY OF CATERPILLAR INC. AND/OR ITS SUBSIDIARIES. WITHOUT WRITTEN PERMISSION, ANY COPYING, TRANSMITTAL TO OTHERS, AND ANY USE EXCEPT THAT FOR WHICH IT IS LOANED, IS PROHIBITED.

GENERAL AR-GENSET
(4016 TRG & LL9*24L)
367-9277 VER DK CHG 00 E