METRIC 367-9278

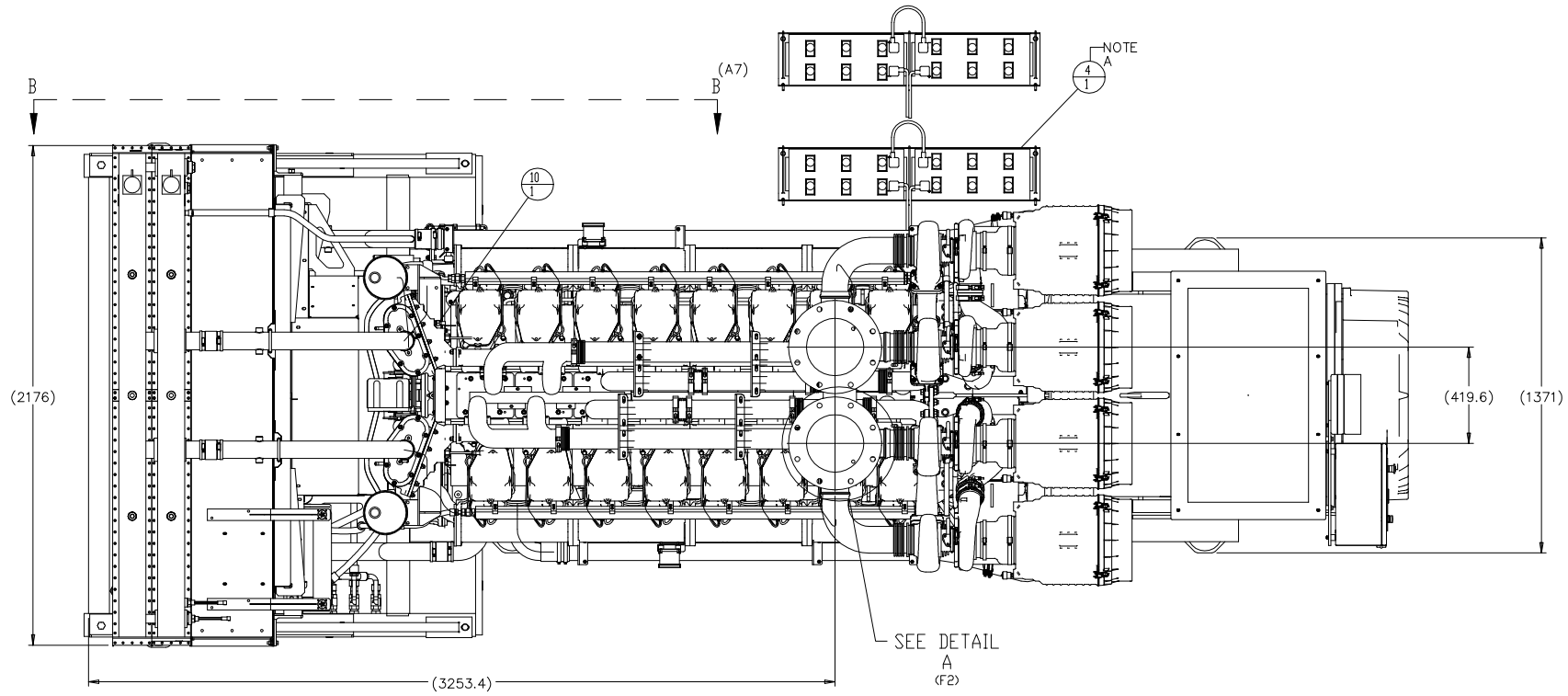

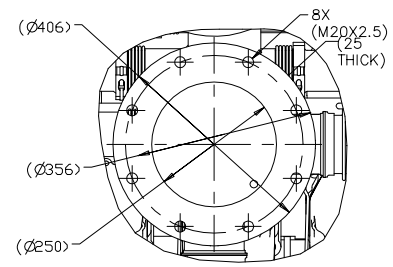

DETAIL A
SCALE 1:5
2X
(E5)

NOTE	ITEM	QTY	MEAS UNIT	PART NO.	NAME
					PARTS LIST
	1	1			CONT GP-MANUAL
	2	1			BOX-STORAGE
	3	1			COUPLING GP
	4	1			BATTERY GP.
	5	1			MTG GP-ENGINE
	6	1			COUPLING GP-FLY
	7	1			DRAIN GP
	8	1			DRAIN GP-OIL
	9	1			SENSOR GP-PRESS
	10	1			SENSOR GP-TEMP
	11	1			PANEL GP-CONT -A
	12	1			WIRING GP
	13	1			WIRING GP-ALT
	14	1			FILM GP
	15	1			FILM GP
	16	1			RADIATOR GP-MTG
	17	1			FILM GP
	18	1			LINES GP-FUEL

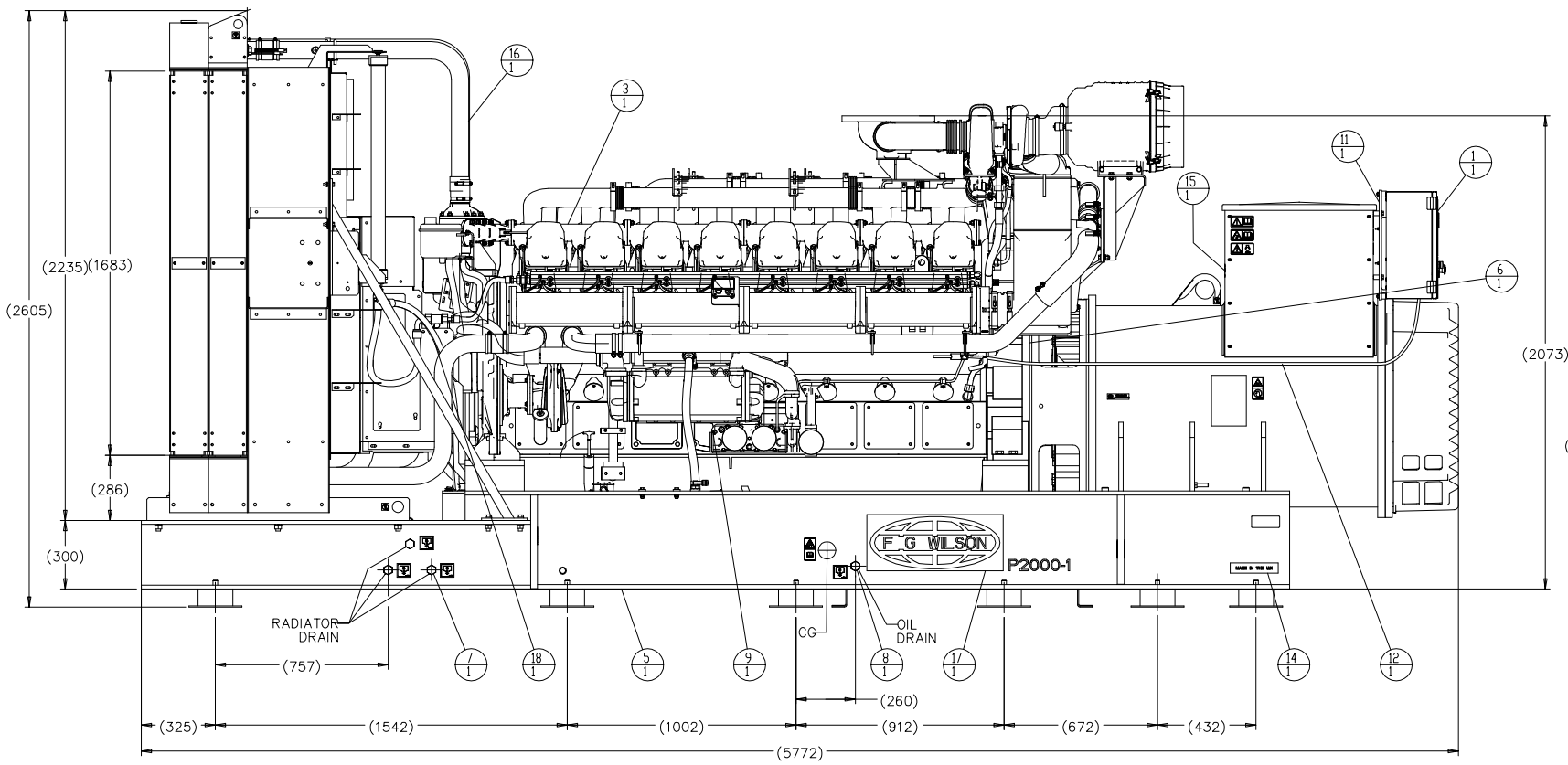

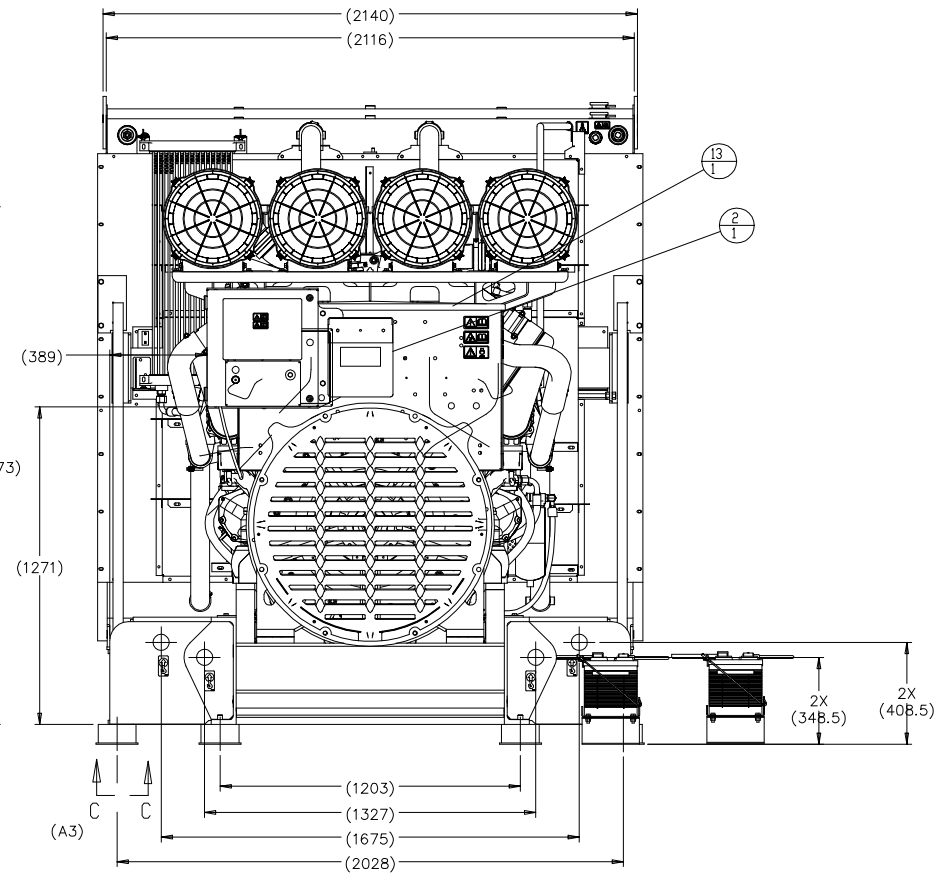

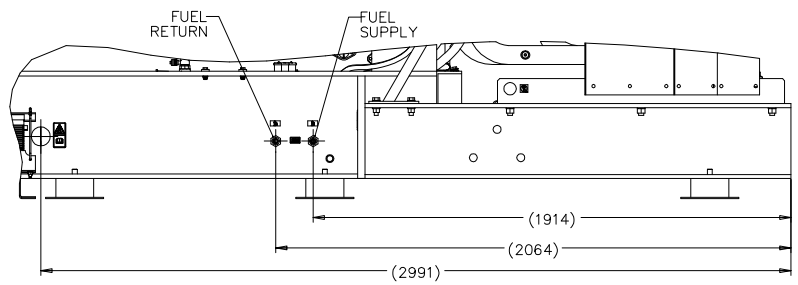

VIEW B-B
(F6)

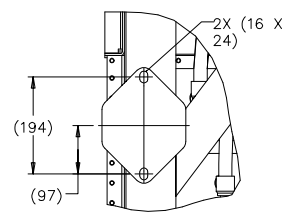

VIEW C-C
SCALE 1:5
12 PLACES
(B3)

NOTE A: TO BE SHIPPED LOOSE. MOUNTED TO FLOOR ONCE INSTALLED

MASS WITH LUBE OIL: 12412 Kg

MASS WITH LUBE OIL AND COOLANT: 12727 Kg

MAT		
HT TR		
	1E2722A	DRAWING
	1E0013Y	CONFIDENTIALITY
	1E0012A	INTERPRETATION
NOTE	1E0011	INTPR & TOL
	Caterpillar: Confidential Yellow	

PROD. X OTHER

UNLESS OTHERWISE SPECIFIED DIMENSIONS ARE IN mm. DIMENSIONS W/O TOL ARE BASIC

VERSION TYPE: PRIMARY X / SECONDARY

THIRD ANGLE PROJECTION

SHEET 1 OF 1

DWG CONTROL MF762

F G WILSON

THE INFORMATION HEREON IS THE PROPERTY OF CATERPILLAR INC. AND/OR ITS SUBSIDIARIES. THIS DOCUMENT MAY NOT BE REPRODUCED OR TRANSMITTED TO OTHERS, AND ANY USE EXCEPT THAT FOR WHICH IT IS LOANED, IS PROHIBITED.

GENERAL AR-GENSET
(4016 TRG & LL9*24H)

367-9278 VER DK CHG 00 E